MAURER

SPIKE® Transport

Peoplemover

Company

Welcome to Maurer Rides!

Maurer Rides GmbH

Since 1876, Maurer has been working from its headquarters in Munich and today has over 1000 employees at six production sites around the world. In 1992, Maurer entered the development and production of Amusement Rides with the takeover of the Anton Schwarzkopf company.

To focus on the roller coaster market, Maurer founded the subsidiary Maurer Rides GmbH in 2003, which today acts as a specialized and independent unit of the Maurer Group.

Maurer Rides specializes in rail-mounted transport systems. This includes roller coaster trains and related Amusement Rides, this includes passenger transportation systems and people movers as well as conveyor systems for the transport of goods.

By setting innovative standards for the development of trend-setting technology in the leisure industry at MAURER Rides, close contact with you, our customers, is one of our main focuses. We attach particular importance to intensive consultation and a comprehensive range of services.

Our team is available for you year round, 24 hours a day, 7 days a week.

forces in motion

Why MAURER?

Making the right decision

Experience

Since its foundation in 1876, MAURER has been an independent, family-owned company. The foundation of our activities lies in steel construction, which still shapes the character of the company today. The control of forces in buildings, bridges and complex dynamic structures is an essential part of the company's activities.

Safety

At MAURER, this is our top priority! Maurer is a pioneer in development and in close cooperation with TÜV. MAURER continues to set new standards in the industry. As a renowned welding company, Maurer has all the relevant welding certificates (manufacturer's qualification class E) and with its own production facilities is able to monitor the quality process at all times.

Customized concepts

The extensive software platform Maurer XTRAC is available for customizing the rail layout.
The dynamic loads on all relevant construction elements are determined by means of exact multi-body simulation.

Quality made in Germany

Quality is the basis for MAURER's success. Our customers around the world show their confidence in us by choosing our products. This trust is based on a quality image established over many years and the reputation of delivering high quality.

Technology

Innovative drive for maximum dynamics

Our unique patented tooth system allows the electromotive driving force to be transferred to the rail slip-free and with 100% traction.

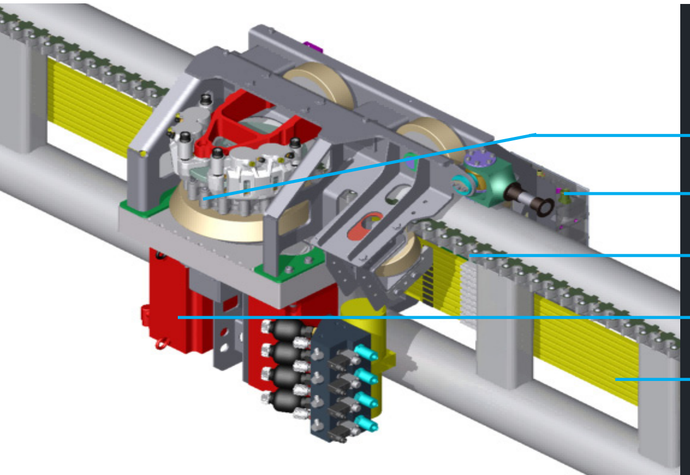

- drive wheel
- control system
- rack
- motor & gear drive
- busbar

Advantages of the system

Unbeatable technology for unique ideas

Development

From prototype to driving experience

For the continued development of the Spike® system, a 50 m long test installation has been available at the University of Stuttgart since 2014 and has been in permanent operation. In addition to material and functional tests, the installation is constantly being expanded, and serves as a prototype and test installation for component development.

test installation at the Stuttgart University

name:	Sky Dragster	acceleration:	1,2g
operator:	Allgäu Skyline Park, Bad Wörishofen	track length:	272 m
v max:	62 km/h	opening:	2017

Possibilities

high capacity & short cycle time

horizontal or up to 45° inclination

Spike® Transport is a people mover that requires minimal space and permits a flexible route. The individual cabins accommodating up to eight passengers can travel at up to speeds of 60 km/h even with short cycle times, allowing for high transportation capacities and short transit times.

Steep inclines of up to 45° are handled effortlessly and ccomfortably with a cabin leveling device for passengers. Extremely tight horizontal and vertical radii make the Spike® people mover a universal passenger transportation system.

City Transport

future oriented, autonomously & environmentally friendly

The single-rail shuttle operation for small-scale applications is possible as well as the realization of large-scale, branched transport networks. The scope of feasible applications ranges from flexible access lift installations to the development of sensitive areas as a visitor rail service both in summer and in winter.

Mountain Peoplemover

flexible, quiet & high capacity

Peoplemover with 4- to 10-seater cabins or standing room for up to 20 passengers, 60 km/h speed and variable slope. Minimum area usage and completely free routing from horizontal to vertical with the smallest curve radius.

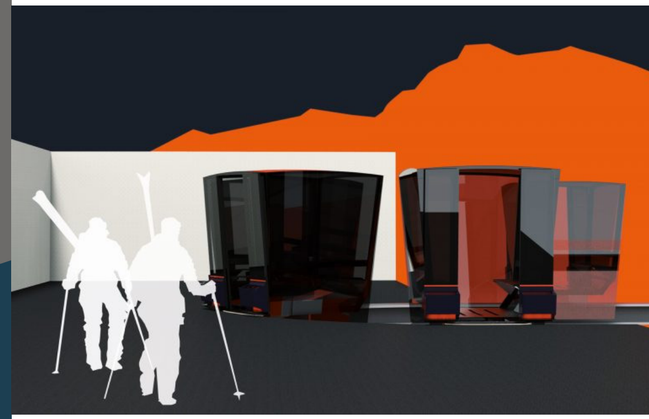

Indoor

Shopping centers & airport terminals become an experience

Thanks to its extremely quiet operation, even indoor routes such as e.g. in shopping centers or terminal areas are not a problem.

Furthermore, it also allows great height differences to be overcome in just a short distance.

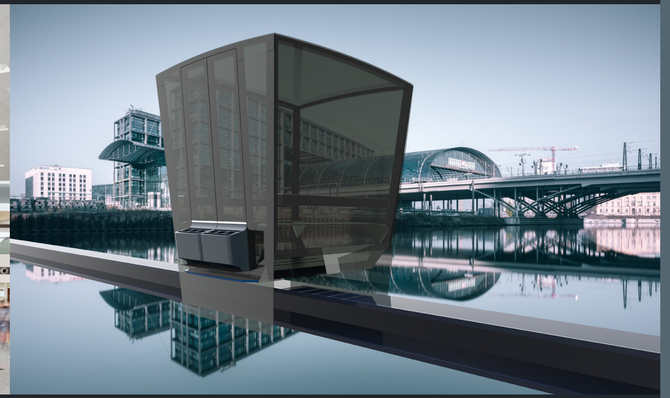

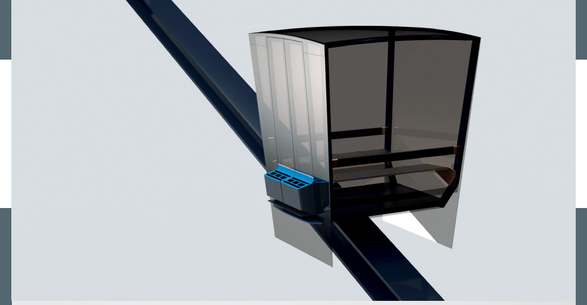

Tourism

Endless possibilities in tourism

A wide range of different cabin shapes are available, which can be installed in a modular fashion. In addition to closed cabins, open versions have also proven an interesting alternative to conventional passenger transportation systems in particular along attractive tourist routes.

For example, a vehicle developed specifically for scenic ways with 12 seats transversely to the direction of travel offers an excellent panorama view and a special traveling experience, which can be further augmented via optional fun elements along the route such as tight curves as well as bumps and dips.

This allows Spike® to take on even extraordinary passenger transportation tasks and break new ground in areas such as at dark rides and on other amusement rides.

MAURER

SPIKE TRANSPORT

MAURER RIDES GMBH

Ammerthalstrasse 34
85551 Kirchheim n. Munich

Tel +49 89 215 4030 31
Fax +49 89 215 4030 99

info@maurer-rides.de

www.maurer-rides.de
www.spike.de
www.maurer.eu